RevNo	Revision note	Date	Name	Checker
1	UPDATED DRIVE	11-14-2005	ROW	
2				
3				
4				

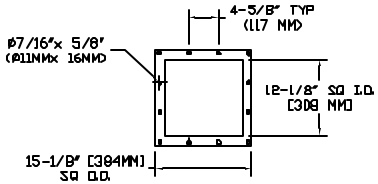

STANDARD DISCHARGE
& ROOF PORT
(NOT TO SCALE)

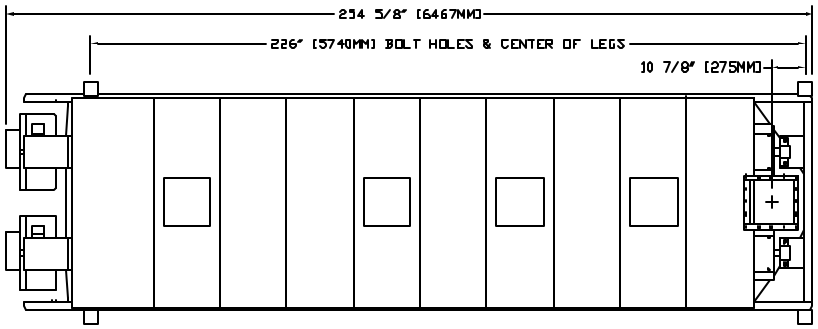

PLAN VIEW

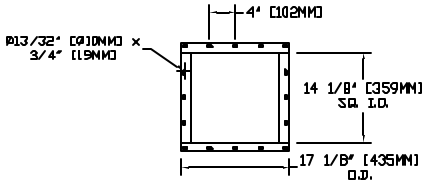

STANDARD INLET
(NOT TO SCALE)

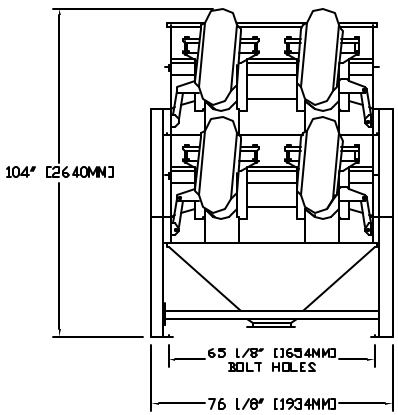

DRIVE END VIEW

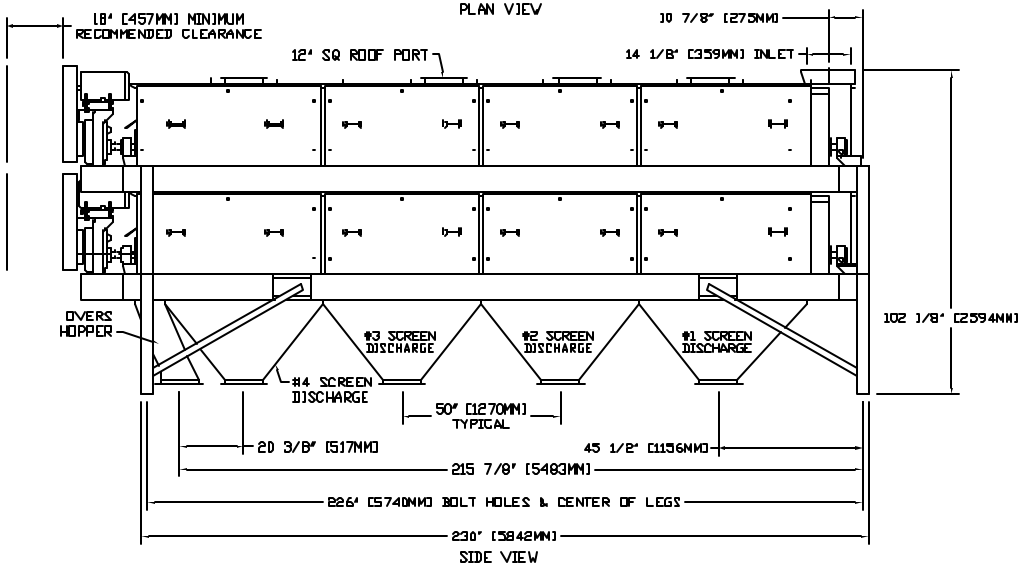

SIDE VIEW

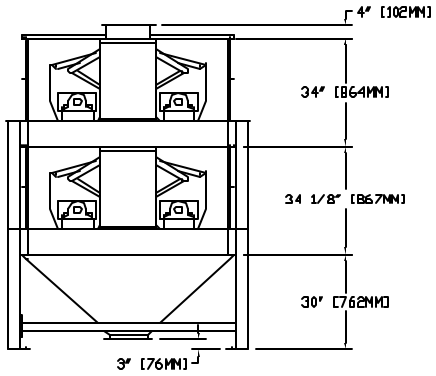

INLET END VIEW

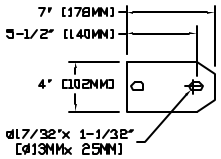

STANDARD LEG PAD

NOTES:
1. STANDARD CENTER DRAW HOPPERS & LEGS SHOWN. OTHER LEGS & HOPPERS ARE AVAILABLE ACCORDING TO CUSTOMER NEEDS. SIDE DRAW HOPPERS ARE OPTIONAL.
2. DIMENSIONS SUBJECT TO CHANGE.

APPROVAL SIGNATURES:

CUSTOMER: _____

CONTRACTOR: _____

Note: This document is submitted for consideration only! Not for copy or for competitive purposes. This document and all information thereon remain the property of EBM Mfg Inc, 1114 Sherwood Road, Norfolk, NE. 68701. All rights of design or invention are reserved.

www.gentleroll.com
www.ebmmanufacturing.com
EBM MANUFACTURING, INC.
NORFOLK, NE 68701

Drawn by	Checked by	Printed	Scale (11"x17")
ROW 07-29-2004	RAZ 09-03-2004	Dec 15, 2006	NTS

EBM GENTLE ROLL

MODEL 24D2-4-HB

Drawing No: 24D2-4-HB

FILE: F:\EBM MFG\CAD\GENTLE\Reference CAD\24D2-4-HB.dwg